MANDÍK®

SQUARE TIGHT REGULATION DAMPER

RKTM

These technical conditions defiNO the range of produced dimensions and versions of "TIGHT REGULATION DAMPERS RKTM"("dampers"). These technical conditions apply to the manufacture, design, ordering, assembly, operation and maintenance.

I. CONTENT

II. GENORAL **3**

1. Description..... 3
2. Design..... 3
3. Dimensions and weights..... 4
4. Placement and installation..... 6

III. TECHNICAL DATA **7**

5. Basic parametrs..... 7
6. Electrical elements, wiring diagram..... 7
7. Pressure lost, flow characteristic..... 13
8. Noise data..... 14

IV. ORDERING INFORMATION **14**

9. Ordering key..... 14

V. MATERIAL, FINISHING **15**

10. Material..... 15

VI. INSPECTION, TESTING **15**

11. Inspection..... 15
12. Testing..... 15

VII. PACKING, TRANSPORT AND STORAGE **15**

13. Logistical data..... 15

VIII. ASSEMBLY **15**

14. Assembly..... 15

II. GENORAL

1. Description

1.1. The dampers consist of a frame, blades fitted with air seal at the perimeter, and a control actuator. They are used to shut off the duct or to control the air flow by choking the flow.

1.2. TightNOss in accordance with EN 1751 across the body: class C and across the blade: for dampers to 0,3 m² class 2, for dampers over 0,3 m² and min. 6 blades class 3.

1.3. The dampers are destiNOd for maximal velocity of air flow 12 m.s^{-1} .

1.4. The dampers are intended for environment protected against weather impacts with the classification of climatic conditions class 3K5, without condensation, frost, ice formation, and without water even from other sources than rain according to EN 60 72133, change A2, with temperature range from -20°C to +80°C.

If the electrical elements are mounted on the damper, temperature range is narrowed by the electrical elements.

1.5. If is not noticed other way, all dimensions and weight are in millimeters and kilograms.

2. Design

2.1. Versions of dampers are shown in the table Tab. 2.1.1. The version is designated by two digits following the TP mark.

Tab. 2.1.1. Version of damper

Version of damper – type of control	Two digits following the TP mark
Manually controlled	.01
To fit actuator drive	.09
To fit actuator drive with emergency function	.09F
Actuator with emergency function 230V	.43*
Actuator controlled 230V, two point regulation - without position signal	.45
Actuator controlled 230V, two point regulation - with position signal	.46
Actuator with emergency function 230V - with position signal	.48*
Actuator with emergency function 24V	.53*
Actuator controlled 24V, two point regulation - without position signal	.55
Actuator controlled 24V, two point regulation - with position signal	.56
Actuator controlled 24V SR with smooth regulation	.57
Actuator with emergency function 24V - with position signal	.58*

*** design is available on request, is NOcessary to specify the position of the damper blade (open or closed) without voltage.**

Fig. 1 damper with actuating mechanism

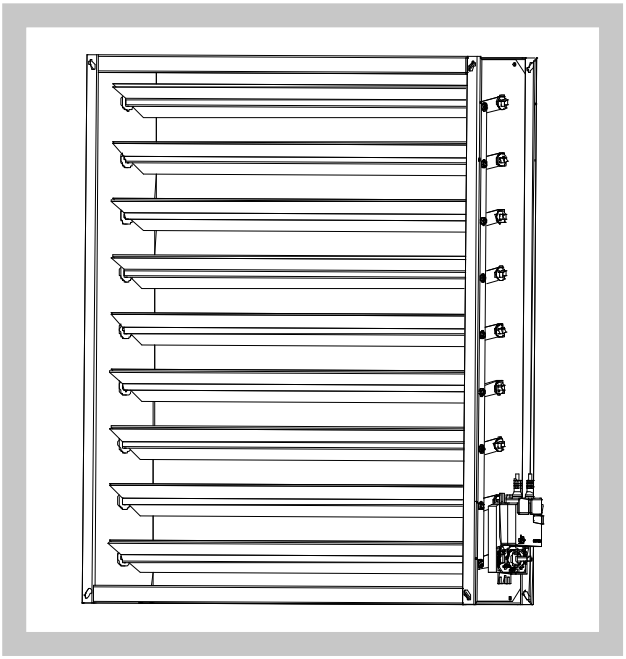

3. Dimensions and weights

3.1. Dimensions, range of dimensions, airflow (effective) area

Tab. 3.1.1. Dimensions, range of dimensions, weight, airflow (effective) area

A x B	Number of blades	S_{ef} [m²]	Weight [kg]	A x B	Number of blades	S_{ef} [m²]	Weight [kg]
200 x 200	2	0,036	3,0	**400 x 1000**	10	0,360	14,4
250	2	0,036	3,5	**500 x 200**	2	0,090	5,4
315	3	0,054	4,1	**250**	2	0,090	6,4
400	4	0,072	4,7	**315**	3	0,135	7,1
500	5	0,090	5,6	**400**	4	0,180	8,2
250 x 200	2	0,045	3,4	**500**	5	0,225	9,5
250	2	0,045	4,0	**630**	6	0,270	11,4
315	3	0,068	4,6	**800**	8	0,360	13,8
400	4	0,090	5,3	**1000**	10	0,450	16,5
500	5	0,113	6,2	**1250**	12	0,540	20,0
630	6	0,135	7,5	**630 x 200**	2	0,113	6,4
315 x 200	2	0,057	3,9	**250**	2	0,113	7,5
250	2	0,057	4,6	**315**	3	0,170	8,4
315	3	0,085	5,2	**400**	4	0,227	9,5
400	4	0,113	6,0	**500**	5	0,284	11,1
500	5	0,142	7,1	**630**	6	0,340	13,4
630	6	0,170	8,5	**800**	8	0,454	16,1
800	8	0,227	10,5	**1000**	10	0,567	19,3
400 x 200	2	0,072	4,6	**1250**	12	0,680	23,5
250	2	0,072	5,4	**1400**	14	0,794	26,0
315	3	0,108	6,1	**800 x 200**	2	0,144	8,4
400	4	0,144	7,0	**250**	2	0,144	9,5
500	5	0,180	8,1	**315**	3	0,216	10,5
630	6	0,216	9,8	**400**	4	0,288	11,8
800	8	0,288	12,0	**500**	5	0,360	13,6

A x B	Number of blades	S_{ef} [m²]	Weight [kg]	A x B	Number of blades	S_{ef} [m²]	Weight [kg]
800 x 630	6	0,432	16,5	**1400 x 630**	6	0,734	29,0
800	8	0,576	19,5	**800**	8	0,965	34,0
1000	10	0,720	23,0	**1000**	10	1,224	40,0
1250	12	0,864	28,0	**1250**	12	1,469	48,5
1400	14	1,008	31,0	**1400**	14	1,714	53,0
1600	16	1,152	34,5	**1600**	16	1,958	59,5
1000 x 200	2	0,180	10,0	**1600 x 630**	6	0,842	32,0
250	2	0,180	11,3	**800**	8	1,123	37,5
315	3	0,270	12,6	**1000**	10	1,404	44,5
400	4	0,360	14,1	**1250**	12	1,685	54,5
500	5	0,450	16,2	**1400**	14	1,966	59,5
630	6	0,540	19,5	**1600**	16	2,246	66,0
800	8	0,720	23,0	**1800 x 630**	6	0,950	35,0
1000	10	0,900	27,0	**800**	8	1,267	41,0
1250	12	1,080	32,0	**1000**	10	1,584	48,5
1400	14	1,260	36,5	**1250**	12	1,901	59,0
1600	16	1,440	41,0	**1400**	14	2,218	64,5
1250 x 400	4	0,450	16,8	**1600**	16	2,534	72,0
500	5	0,563	19,5	**2000 x 800**	8	1,411	44,5
630	6	0,675	23,5	**1000**	10	1,764	53,0
800	8	0,900	27,5	**1250**	12	2,117	64,0
1000	10	1,125	32,0	**1400**	14	2,470	70,0
1250	12	1,350	39,0	**1600**	16	2,822	78,0
1400	14	1,575	43,5				
1600	16	1,800	49,0				
1400 x 500	5	0,612	24,0				

S_{ef} - effective area for fully opeNOd damper.
The weights listed in the table are valid for the basic version (manually controlled). The weight of the servo actuator must be added to all other versions − see table 6.1.1.
Atypical dimensions of the damper must be discussed with the manufacturer in advance.

Fig. 2 Manually controlled damper without divider (for A < 1300) without reinforcing bolt (for B < 1200)

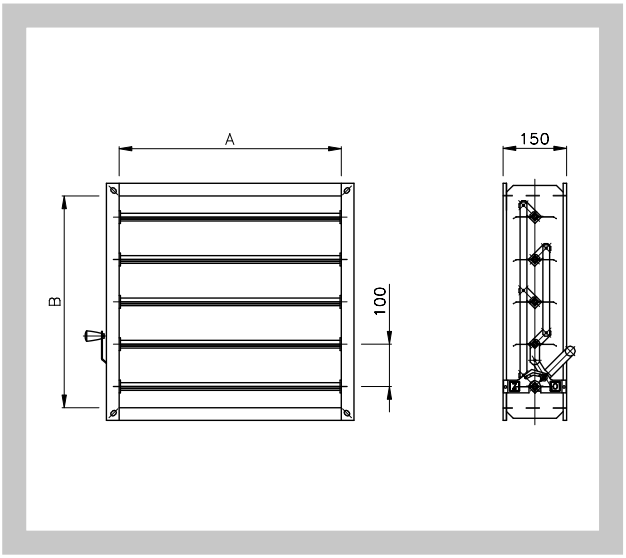

Fig. 3 Actuator controlled damper without divider (for A < 1300) without reinforcing bolt (for B < 1200)

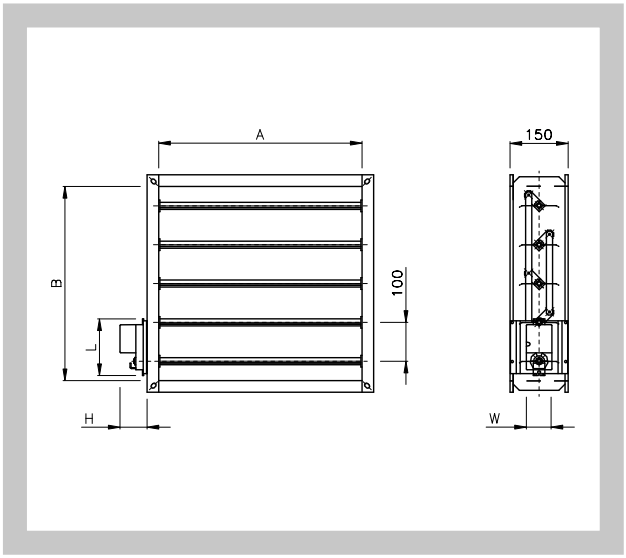

Fig. 4 Manually controlled damper with divider (for A ≥ 1300) with reinforcing bolt (for B ≥ 1200)

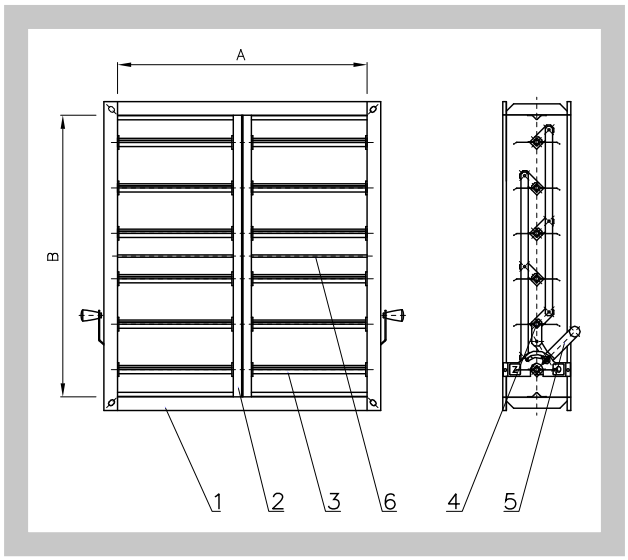

Fig. 5 Actuator controlled damper with divider (for A ≥ 1300) with reinforcing bolt (for B ≥ 1200)

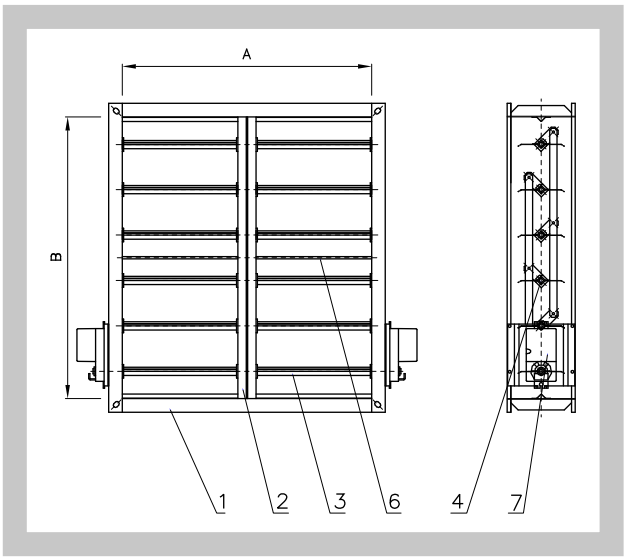

Item:

1. body of damper
2. divider (only for dampers where A ≥ 1300)
3. blade
4. control actuator
5. control rod
6. reinforcing bolt (only for damper where B ≥ 1200)
7. servo actuator

Fig. 6 Detail of flange

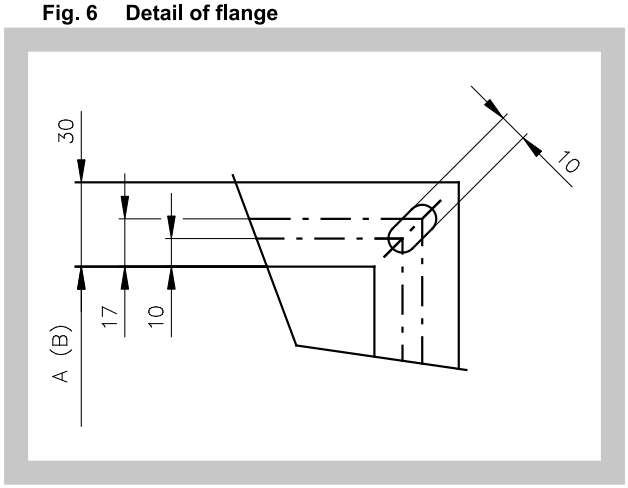

3.2. Atypical dimensions regulating valve must first be discussed with the manufacturer.

3.3. Dampers to install servo drive unit are provided square−shaped pin of cross−section 8x8 mm, which the servo drive unit is fitted on directly or using a reducer.
The pin is overlapping the damper flange by 60 mm.

4. Placement and installation

4.1. The dampers are desigNOd to be installed into the air duct. The flaps can be used in any

4.2. The actuator requires a 250 mm clearance (minimum).

III. TECHNICAL DATA

5. Basic parameters

5.1. Maximum pressure difference on control flaps

Tab. 5.1.1. Maximum pressure difference

Maximum pressure difference △p [Pa]											
A/B	**200**	**250**	**315**	**400**	**500**	**630**	**800**	**1000**	**1250**	**1400**	**1600**
200	1500	1500	1500	1500	1500	x	x	x	x	x	x
250	1500	1500	1500	1500	1500	1500	x	x	x	x	x
315	1500	1500	1500	1500	1500	1500	1500	x	x	x	x
400	1500	1500	1500	1500	1500	1500	1500	1500	x	x	x
500	1500	1500	1500	1500	1500	1500	1500	1500	1500	x	x
630	1500	1500	1500	1500	1500	1500	1500	1500	1500	1200	x
800	1500	1500	1500	1500	1500	1500	1500	1500	1500	1200	1200
1000	1500	1500	1500	1500	1500	1500	1500	1500	1500	1200	1200
1250	x	x	x	1200	1200	1200	1200	1200	1200	1200	1200
1400	x	x	x	x	1200	1200	1200	1200	1200	1200	1200
1600	x	x	x	x	x	1200	1200	1200	1200	1200	1200
1800	x	x	x	x	x	1200	1200	1200	1200	1200	1200
2000	x	x	x	x	x	x	1200	1200	1200	1200	1200

6. Electrical elements, wiring diagram

6.1. Types and weights of servo actuators for control of dampers

Tab. 6.1.1. Type of actuator for individually dampers

Type of servo actuator		Design	Position signal	Emergency functions	Torque	Weight [kg]	Dimensions L x H x W
NM	Belimo NM 230A-S	.46	YES	NO	10 Nm	0,9	124 x 62 x 80
	Belimo NM 230A	.45	NO			0,8	
	Belimo NM 24A-S	.56	YES			0,9	
	Belimo NM 24A	.55	NO			0,8	
	Belimo NM 24A-SR	.57	YES			0,8	
SM	Belimo SM 230A-S	.46	YES		20 Nm	1,1	139 x 64 x 88
	Belimo SM 230A	.45	NO			1,1	
	Belimo SM 24A-S	.56	YES			1,1	
	Belimo SM 24A	.55	NO			1,0	
	Belimo SM 24A-SR	.57	YES			1,1	
GM	Belimo GM 230A+S1A	.46	YES		40 Nm	1,8	179 x 70 x 116
	Belimo GM 230A	.45	NO			1,7	
	Belimo GM 24A-S	.56	YES			1,8	
	Belimo GM 24A	.55	NO			1,7	
	Belimo GM 24A-SR	.57	YES			1,7	
LF	Belimo LF 230A	.43	NO	YES	5 Nm	1,7	130 x 82 x 98
	Belimo LF 230A-S	.48	YES			1,8	
	Belimo LF 24A	.53	NO			1,5	
	Belimo LF 24A-S	.58	YES			1,6	
NF	Belimo NFA	.43	NO		10 Nm	1,8	182 x 93 x 98
	Belimo NFA-S2	.48	YES			1,9	
	Belimo NF 24A	.53	NO			2,1	
	Belimo NF 24A-S2	.58	YES			2,3	
SF	Belimo SFA	.43	NO		20 Nm	1,7	182 x 93 x 98
	Belimo SFA-S2	.48	YES			2,0	
	Belimo SF 24A	.53	NO			2,3	
	Belimo SF 24A-S2	.58	YES			2,4	

Tab. 6.1.2. The type and number of actuators for damper size - standard servo / actuator with emergency function

RKTM		A												
		200	250	315	400	500	630	800	1000	1250	1400	1600	1800	2000
B	200	NM/LF	NM/LF	NM/LF	NM/LF	NM/NF	NM/NF	NM/NF	NM/NF	x	x	x	x	x
	250	NM/LF	NM/LF	NM/LF	NM/LF	NM/NF	NM/NF	NM/NF	NM/NF	x	x	x	x	x
	315	NM/LF	NM/LF	NM/LF	NM/LF	NM/NF	NM/NF	SM/SF	SM/SF	x	x	x	x	x
	400	NM/NF	NM/NF	NM/NF	NM/NF	NM/NF	SM/SF	SM/SF	SM/SF	SM/SF	x	x	x	x
	500	SM/SF	SM/SF	SM/SF	SM/SF	SM/SF	SM/SF	SM/SF	SM/SF	SM/SF	2xSM/ 2xSF	x	x	x
	630	SM/SF	SM/SF	SM/SF	SM/SF	SM/SF	SM/SF	SM/SF	SM/SF	SM/SF	2xSM/ 2xSF	2xSM/ 2xSF	2xSM/ 2xSF	x
	800	SM/SF	SM/SF	SM/SF	SM/SF	SM/SF	SM/SF	SM/SF	SM/SF	GM/SF	2xSM/ 2xSF	2xSM/ 2xSF	2xSM/ 2xSF	2xSM/ 2xSF
	1000	SM/SF	SM/SF	SM/SF	SM/SF	SM/SF	SM/SF	GM/ 2xSF	GM/ 2xSF	GM/ 2xSF	2xSM/ 2xSF	2xGM/ 4xSF	2xGM/ 4xSF	2xGM/ 4xSF
	1250	x	x	x	x	GM/ 2xSF	GM/ 2xSF	GM/ 2xSF	GM/ 2xSF	GM/ 2xSF	2xGM/ 4xSF	2xGM/ 4xSF	2xGM/ 4xSF	2xGM/ 4xSF
	1400	x	x	x	x	x	GM/ 2xSF	GM/ 2xSF	GM/ 2xSF	GM/ 2xSF	2xGM/ 4xSF	2xGM/ 4xSF	2xGM/ 4xSF	2xGM/ 4xSF
	1600	x	x	x	x	x	x	GM/ 2xSF	GM/ 2xSF	GM/ 2xSF	2xGM/ 4xSF	2xGM/ 4xSF	2xGM/ 4xSF	2xGM/ 4xSF
	1800	x	x	x	x	x	x	2xSM/ 2xSF	2xSM/ 2xSF	2xSM/ 2xSF	4xSM/ 4xSF	4xSM/ 4xSF	4xSM/ 4xSF	4xSM/ 4xSF
	2000	x	x	x	x	x	x	2xSM/ 2xSF	2xSM/ 2xSF	2xSM/ 2xSF	4xSM/ 4xSF	4xSM/ 4xSF	4xSM/ 4xSF	4xSM/ 4xSF

6.2. Supply voltage and power inputs.

Tab. 6.2.1. Supply voltage and power input

Type of actuator	Supply voltage	Power input		
		In operation	Resting position	Dimensioning
NM 230A-F, NM 230A-S	AC 100 ... 240 V, 50/60 Hz	2,5 W	0,6 W	6 VA
NM 24A-F, NM 24A-S	AC 24 V, 50/60 Hz; DC 24 V	1,5 W	0,2 W	3,5 VA
NM 24A-SR	AC 24 V, 50/60 Hz; DC 24 V	2 W	0,4 W	4 VA
SM 230A, SM 230A-S	AC 100 ... 240 V, 50/60 Hz	2,5 W	0,6 W	6 VA
SM 24A, SM 24A-S	AC 24 V, 50/60 Hz; DC 24 V	2 W	0,2 W	4 VA
SM 24A-SR	AC 24 V, 50/60 Hz; DC 24 V	2 W	0,4 W	4 VA
GM 230A	AC 85 ... 264 V, 50/60 Hz	5 W	2,5 W	9 VA
GM 24A, GM 24A-S	AC 24 V, 50/60 Hz; DC 24 V	4 W	2 W	6 VA
GM 24A-SR	AC 24 V, 50/60 Hz; DC 24 V	4,5 W	2 W	6,5 VA
LF 230, LF 230-S	AC 198 … 264 V, 50/60 Hz	5 W	3 W	7 VA
LF 24, LF 24-S	AC 24 V, 50/60 Hz; DC 24 V	5 W	2,5 W	7 VA
NFA, NFA-S2	AC 24 ... 240 V, 50/60 Hz / DC 24 ... 125 V	6 W	2,5 W	9,5 VA
NF 24A, NF 24A-S2	AC 24 V, 50/60 Hz; DC 24 V	6 W	2,5 W	8,5 VA
SFA, SFA-S2	AC 24 ... 240 V, 50/60 Hz / DC 24 ... 125 V	7 W	3,5 W	18 VA
SF 24A, SF 24A-S2	AC 24 V, 50/60 Hz; DC 24 V	5 W	2,5 W	7,5 VA

6.3. Wiring diagram of servo actuators Belimo

Fig. 7 Wiring diagram of servo actuators Belimo NM 230A, SM 230A and GM 230A

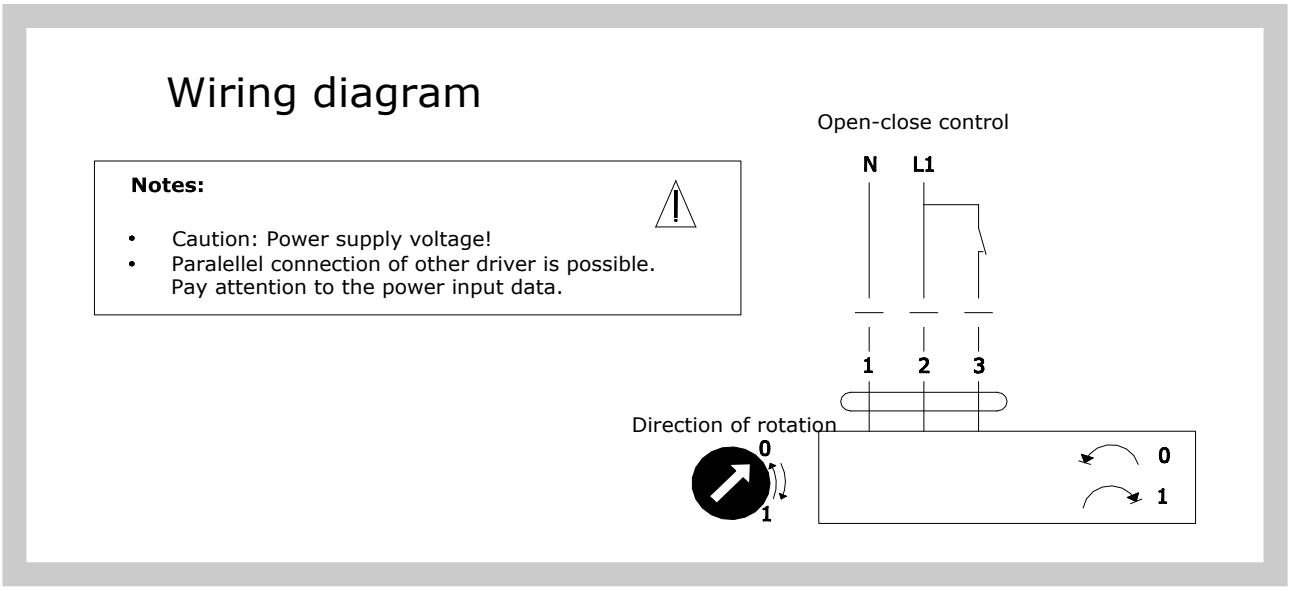

Fig. 8 Wiring diagram of servo actuators Belimo NM 24A, SM 24A and GM 24A

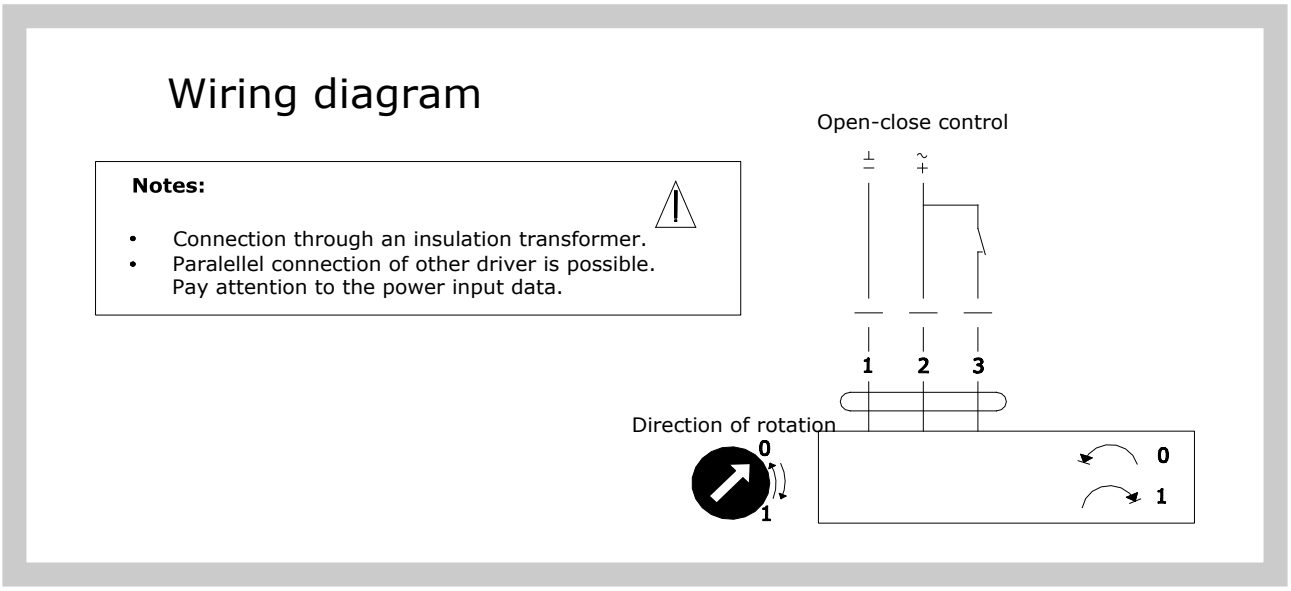

Fig. 9 Wiring diagram of servo actuators Belimo NM 24A-SR, SM 24A-SR and GM 24A-SR

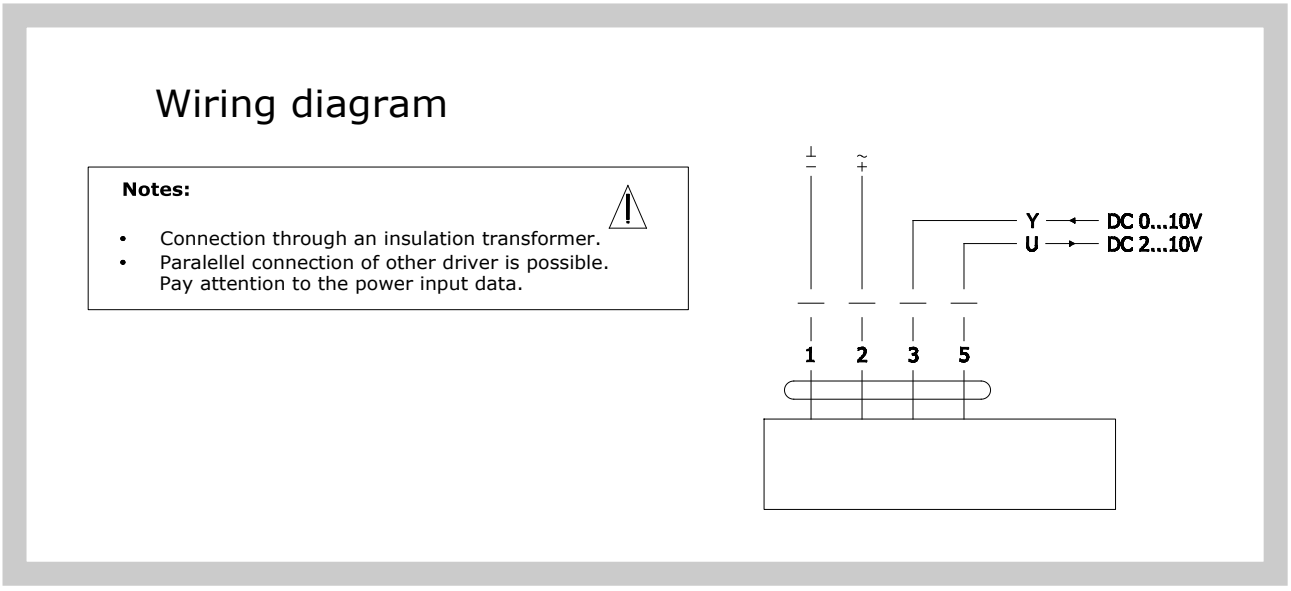

Fig. 10 Wiring diagram of servo actuators Belimo NM 230A-S, SM 230A-S

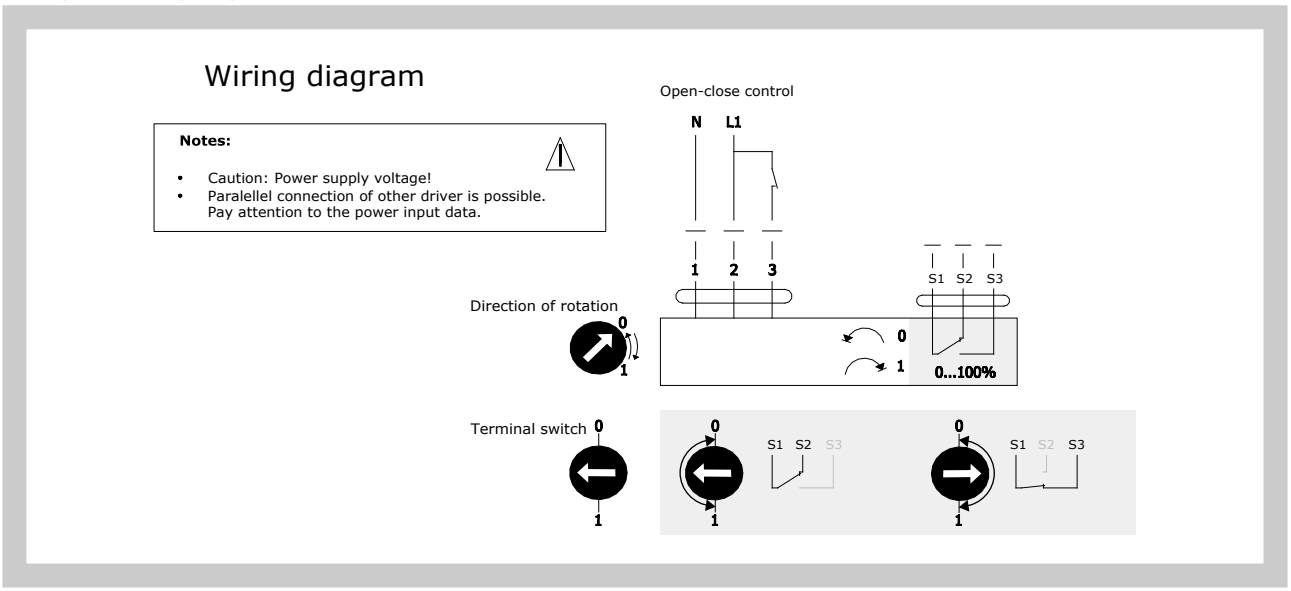

Fig. 11 Wiring diagram of servo actuators Belimo NM 24A-S, SM 24A-S and GM 24A-S

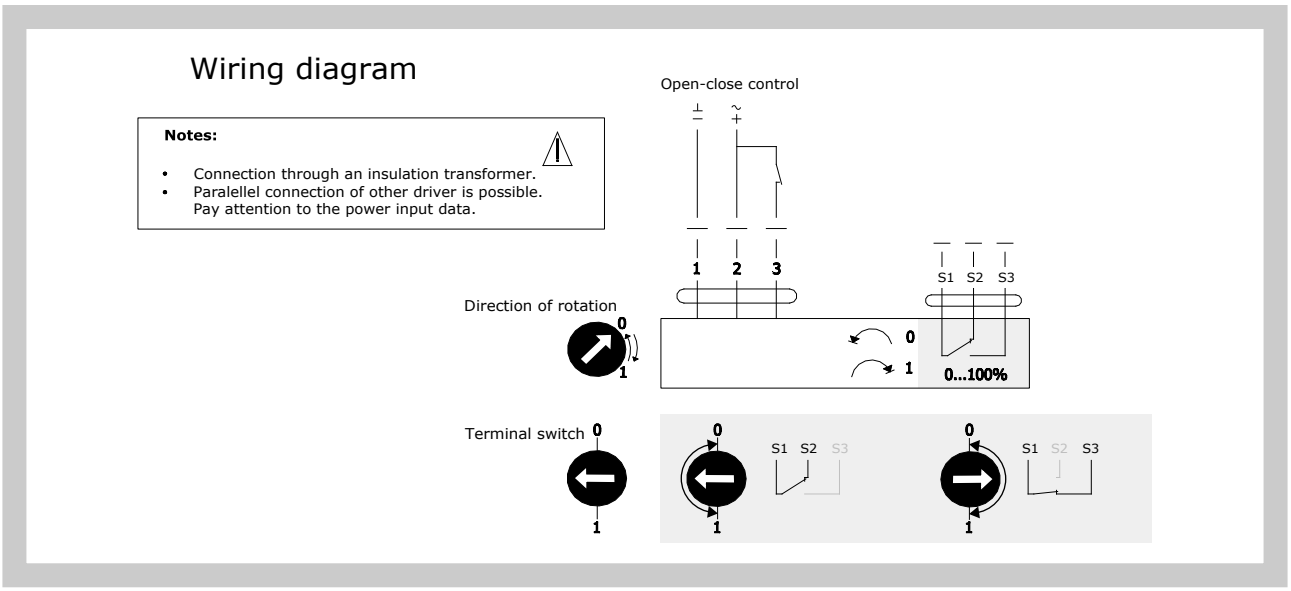

Fig. 12 Wiring diagram of servo actuators Belimo LF 24, NF 24A, SF 24A

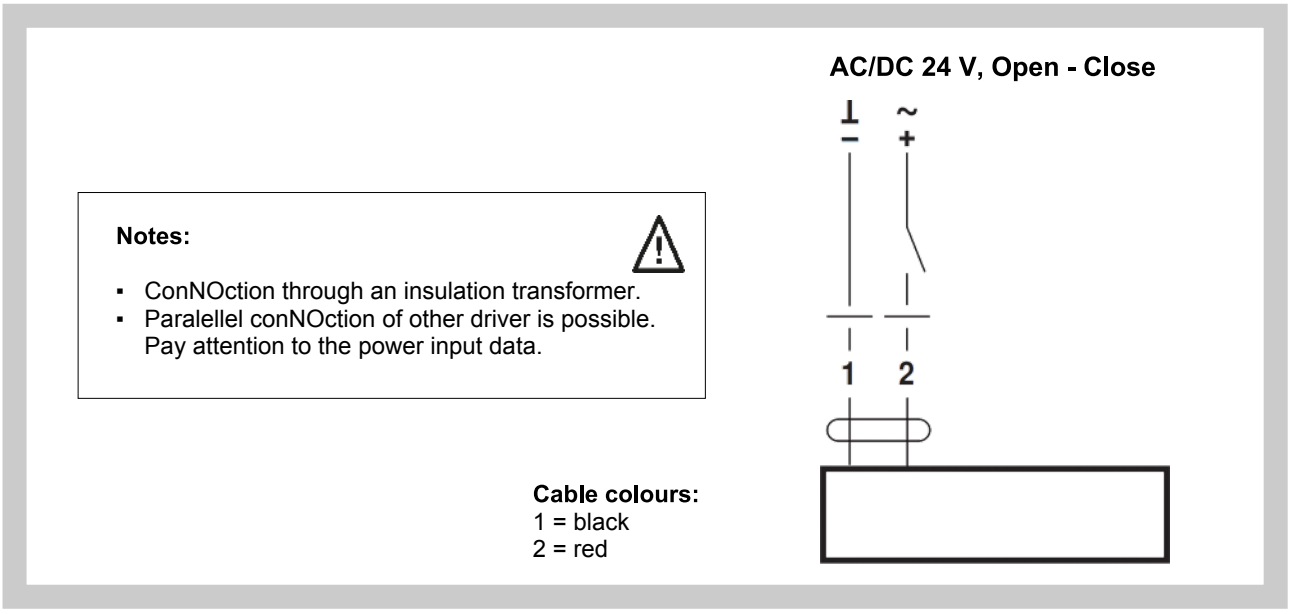

Fig. 13 Wiring diagram of servo actuators Belimo LF 230

Notes:

- Caution: Power supply voltage!
- Paralellel conNOction of other driver is possible. Pay attention to the power input data.

Cable colours:
1 = blue
2 = brown

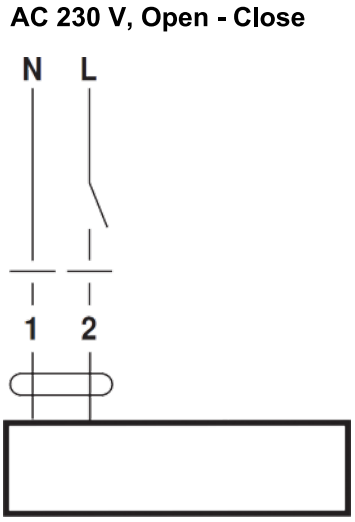

Fig. 14 Wiring diagram of servo actuators Belimo LF 24-S

Notes:

- ConNOction through an insulation transformer.
- Paralellel conNOction of other driver is possible. Pay attention to the power input data.

Cable colours:
1 = black
2 = red
S1 = white
S2 = white
S3 = white

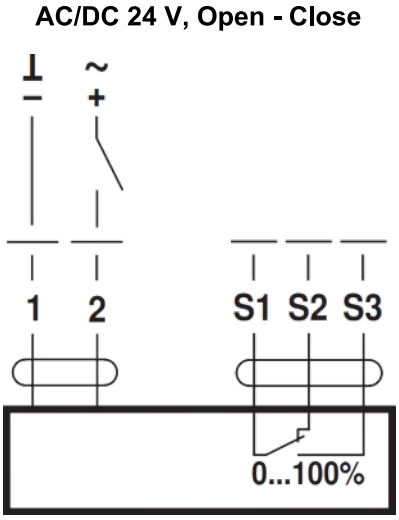

Fig. 15 Wiring diagram of servo actuators Belimo LF 230-S

Notes:

- Caution: Power supply voltage!
- Paralellel conNOction of other driver is possible. Pay attention to the power input data.

Cable colours:
1 = blue
2 = brown
S1 = white
S2 = white
S3 = white

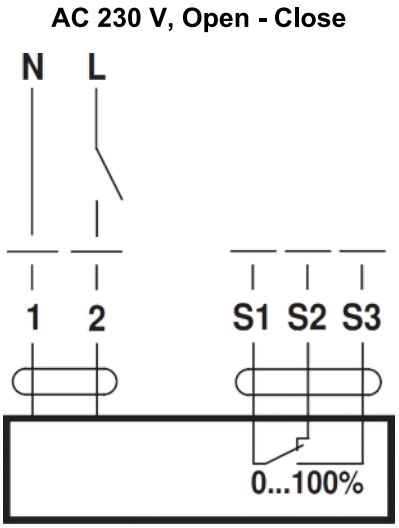

Fig. 16 Wiring diagram of servo actuators Belimo NFA, SFA

AC 24 ... 240 V / DC 24 ... 125 V, Open - Close

Notes:

- Caution: Power supply voltage!
- Paralellel conNOction of other driver is possible. Pay attention to the power input data.

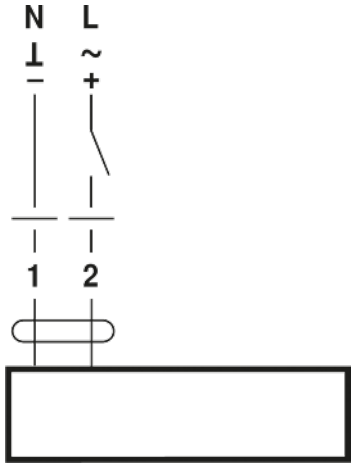

Cable colours:
1 = blue
2 = brown

Fig. 17 Wiring diagram of servo actuators Belimo NF 24A-S2, SF 24A-S2

AC/DC 24 V, Open - Close

Notes:

- ConNOction through an insulation transformer.
- Paralellel conNOction of other driver is possible. Pay attention to the power input data.

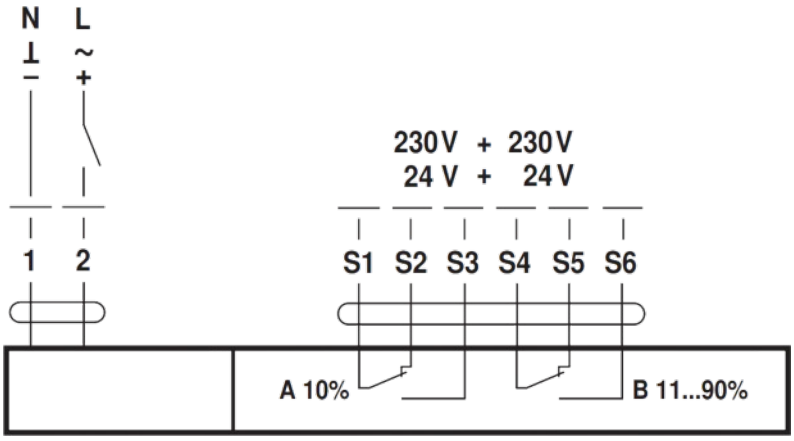

Cable colours:
1 = black
2 = red
S1 = violet
S2 = red
S3 = white
S4 = orange
S5 = pink
S6 = grey

Fig. 18 Wiring diagram of servo actuators Belimo NFA-S2, SFA-S2

AC 24 ... 240 V / DC 24 ... 125 V, Open - Close

Notes:

- Caution: Power supply voltage!
- Paralellel conNOction of other driver is possible. Pay attention to the power input data.

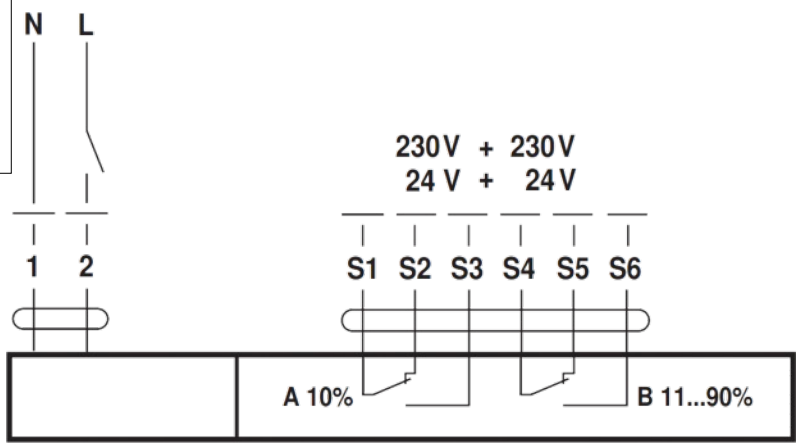

Cable colours:
1 = blue
2 = brown
S1 = violet
S2 = red
S3 = white
S4 = orange
S5 = pink
S6 = grey

7. Pressure lost, air flow characteristic

7.1. Air flow characteristic

Chart 7.1.1. Flow characteristic for constant pressure difference at the damper Δp = konst. = 40 Pa

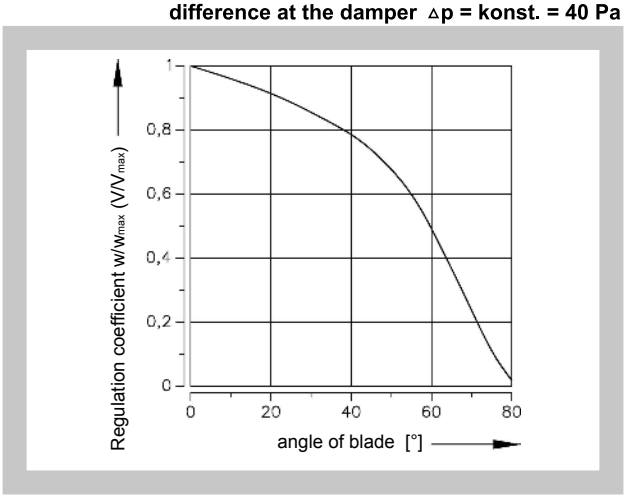

7.2. Pressure lost depending on the angle of damper blade

Chart 7.2.1. Regulation damper inserted into the duct

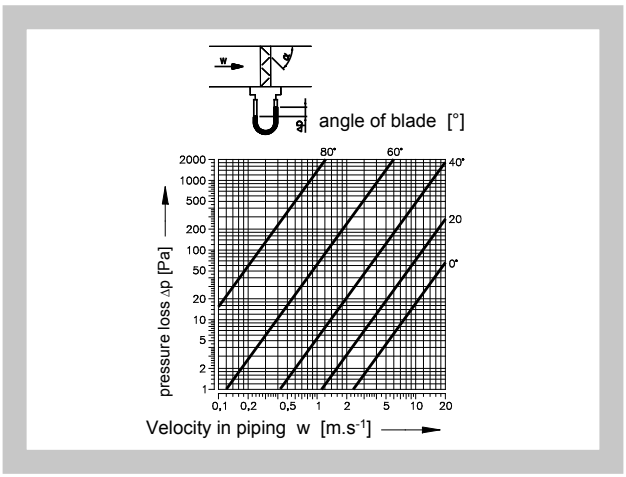

Chart 7.2.2. Regulation damper attached to the end of the duct

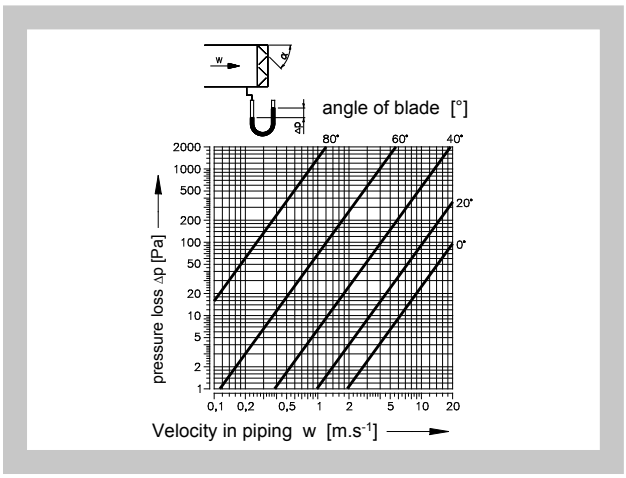

7.3. TightNOss of the dampers

Chart 7.3.1. TightNOss of the dampers

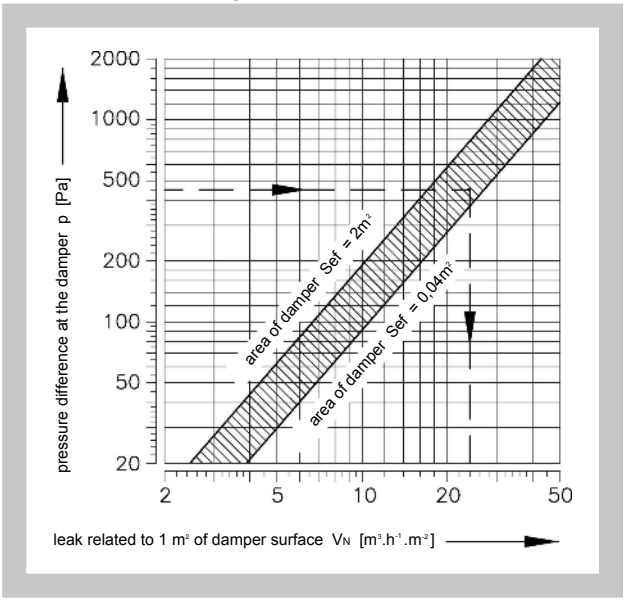

$$\mathring{V}_{NK} = \mathring{V}_N * S_{ef}$$

$\mathring{V}$	[m³.h⁻¹]	volumetric airflow
w	[m.s⁻¹]	velocity of air flow
p	[Pa]	pressure difference at the damper
S_{ef}	[m²]	effective area of damper
Δp	[Pa]	pressure lost at ρ = 1,2 kg.m³
α	[°]	angle of blade
$\mathring{V}_N$	[m³.h⁻¹.m⁻²]	leak related to 1 m² of damper surface
$\mathring{V}_{NK}$	[m³.h⁻¹]	leak of damper

8. Noise data

8.1. Aerodynamic noise from airflow controller is mentioNOd in Table. 8.1.1.

$$L_{WA} = L_{WA^\circ} + K_A$$

Tab. 8.1.1. Correction

Area of damper A x B [m²]	0,04	0,06	0,1	0,2	0,4	0,6	1	2	4	8
Factor K [dB]	-13	-12	-10	-8	-4	-2	1	3	6	9

Diagram 8.1.1. Aerodynamic noise

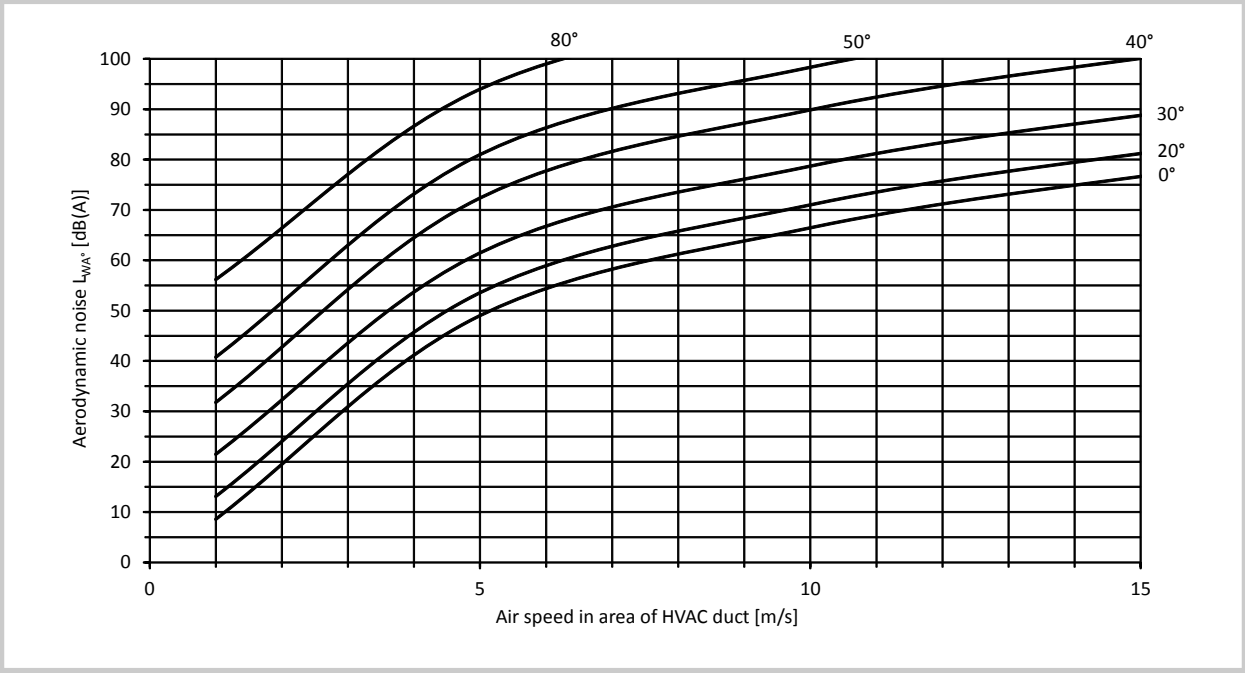

IV. ORDERING INFORMATION

9. Ordering key

RKTM 500x400 - .45 TPM 012/00

- TPM 012/00 — technical specifications
- .45 — design according to Tab. 2.1.1.
- 500x400 — size
- RKTM — type

V. MATERIAL, FINISHING

10. Material

10.1. The frame, blades and actuator are made of zinc−plated steel sheet, the pins of the damper are made of plastic. (on request can be supplied design with steel pins).
The air tight seal at the perimeter of the blade is made of silicoNO.
The damper has no other surface treatment.

10.2. According to the customer's requirements, damper can be made of stainless material.

Specifications for stainless-steel models – classification of stainless steel:

- Class A2 – Food-grade stainless steel (AISI 304 – ČSN 17240)
- Class A4 – Chemistry-grade stainless steel (AISI 316, 316L – ČSN 17346, 17349)

The indicated metal is used for all metal compoNOnts of the damper except the servo drive and its adapters.

The following compoNOnts, including the fasteNOrs, are made from stainless steel at all times:

1) Damper body and all compoNOnts permaNOntly attached
2) Leaf pins, metal compoNOnts of the leaf
3) Controlling compoNOnts outside the damper (levers, control levers, metal part of the pin or the entire pin)
4) Servo drive mount

Plastic, rubber and silicon compoNOnts, sealants, servo drives, and end switches are identical for all material variants of the dampers.

Some fasteNOrs and compoNOnts are available in oNO class of stainless steel; the type will be used in all stainless-steel variants.

Any other requirements for the design shall be considered atypical and shall be addressed on an individual basis.

VI. INSPECTION, TESTING

11. Inspection

11.1. Dimensions are checked using regular rulers according to the standard applicable to dimensions without defiNOd tolerances used in the air conditioning trade.

11.2. Intraoperational inspections of the parts and main dimensions according to the drawing documentation are performed.

12. Testing

12.1. After assembly, the operation of the blade and of electrical actuators is performed.

VII. PACKING, TRANSPORT, STORAGE

13. Logistical data

13.1. The delivery includes a complete damper including the control mechanism.

13.2. The damper are transported as bulk cargo, using suitable covered means of transport. When agreed upon with the manufacturer, the dampers can be loaded onto palettes or wooden crates. Dampers must be protected from mechanical damage during transport and storage.
If packing is used, it is non−returnable and its price is not included in the price of the damper.

13.3. If not otherwise agreed, the handover is considered when the goods is forwarded to the carrier.

13.4. The dampers must be stored in the indoor environment without any aggressive vapours, gases or dust. Indoor temperature must be in the range from -5°C to +40°C and maximum relative humidity 80%. Dampers must be protected against mechanic damages when transported and manipulated.

VIII. ASSEMBLY

14. Assembly

14.1. The assembly consists of installation of the damper into the air duct, with conNOction of optional servo actuator to the mains.

MANDÍK, a.s.
Dobříšská 550
26724 Hostomice
Czech Republic
Tel.: +420 311 706 706
E-Mail: mandik@mandik.cz
www.mandik.com

The producer reserves the right for innovations of the product. For actual product information see www.mandik.com